YASKAWA

YRC1000micro OPTIONS
INSTRUCTIONS

FOR INTERRUPT JOB FUNCTION

Upon receipt of the product and prior to initial operation, read these instructions thoroughly, and retain for future reference.

MOTOMAN INSTRUCTIONS

MOTOMAN-□□□ INSTRUCTIONS
YRC1000micro INSTRUCTIONS
YRC1000micro OPERATOR'S MANUAL
YRC1000micro MAINTENANCE MANUAL
YRC1000micro ALARM CODES (MAJOR ALARMS) (MINOR ALARMS)

The YRC1000micro alarm codes above consists of "MAJOR ALARMS" and "MINOR ALARMS".

Have the following information available when contacting the YASKAWA Representative:
- System
- Primary Application
- Software Version *(Located on Programming Pendant by selecting: {Main Menu} - {System Info} - {Version})*
- Warranty ID *(Located on Robot Controller)*
- Robot Serial Number *(Located on Manipulator data plate)*
- Robot Sales Order Number *(Located on Robot controller data plate)*

The Americas YASKAWA Representative

- 24-hour Telephone Number: **(937) 847-3200**
  Use for urgent or emergency needs for technical support, service and/or replacement parts
- Routine Technical Inquiries: *techsupport@motoman.com*
  Allow up to 36 hours for response

Part Number: 181292-1CD
Revision: 1

MANUAL NO.
HW1484494 ① 1/28

DANGER

- This manual explains the interrupt job function of the YRC1000micro system. Read this manual carefully and be sure to understand its contents before handling the YRC1000micro. Any matter not described in this manual must be regarded as "prohibited" or "improper".
- General information related to safety are described in "Chapter 1. Safety" of the YRC1000micro INSTRUCTIONS. To ensure correct and safe operation, carefully read "Chapter 1. Safety" of the YRC1000micro INSTRUCTIONS.

CAUTION

- In some drawings in this manual, protective covers or shields are removed to show details. Make sure that all the covers or shields are installed in place before operating this product.
- YASKAWA is not responsible for incidents arising from unauthorized modification of its products. Unauthorized modification voids the product warranty.

NOTICE

- The drawings and photos in this manual are representative examples and differences may exist between them and the delivered product.
- YASKAWA may modify this model without notice when necessary due to product improvements, modifications, or changes in specifications. If such modification is made, the manual number will also be revised.
- If your copy of the manual is damaged or lost, contact a YASKAWA representative to order a new copy. The representatives are listed on the back cover. Be sure to tell the representative the manual number listed on the front cover.

Notes for Safe Operation

Read this manual carefully before installation, operation, maintenance, or inspection of the YRC1000micro.

In this manual, the Notes for Safe Operation are classified as “DANGER”, “WARNING”, “CAUTION”, or “NOTICE”.

DANGER

Indicates an imminently hazardous situation which, if not avoided, will result in death or serious injury. Safety Signs identified by the signal word DANGER should be used sparingly and only for those situations presenting the most serious hazards.

WARNING

Indicates a potentially hazardous situation which, if not avoided, will result in death or serious injury. Hazards identified by the signal word WARNING present a lesser degree of risk of injury or death than those identified by the signal word DANGER.

CAUTION

Indicates a hazardous situation, which if not avoided, could result in minor or moderate injury. It may also be used without the safety alert symbol as an alternative to “NOTICE”.

NOTICE

NOTICE is the preferred signal word to address practices not related to personal injury. The safety alert symbol should not be used with this signal word. As an alternative to “NOTICE”, the word “CAUTION” without the safety alert symbol may be used to indicate a message not related to personal injury.

Even items described as “CAUTION” may result in a serious accident in some situations.
At any rate, be sure to follow these important items.

NOTE

To ensure safe and efficient operation at all times, be sure to follow all instructions, even if not designated as “DANGER”, “WARNING” and “CAUTION".

DANGER

- Before operating the manipulator, make sure the servo power is turned OFF by performing the following operations. When the servo power is turned OFF, the SERVO ON LED on the programming pendant is turned OFF.
  - Press the emergency stop button on the programming pendant or on the external control device, etc.
  - Disconnect the safety plug of the safety fence. (when in the play mode or in the remote mode)

If operation of the manipulator cannot be stopped in an emergency, personal injury and/or equipment damage may result.

Fig. : Emergency Stop Button

- Before releasing the emergency stop, make sure to remove the obstacle or error caused the emergency stop, if any, and then turn the servo power ON.

Failure to observe this instruction may cause unintended movement of the manipulator, which may result in personal injury.

Fig. : Release of Emergency Stop

- Observe the following precautions when performing a teaching operation within the manipulator's operating range:
  - Be sure to perform lockout by putting a lockout device on the safety fence when going into the area enclosed by the safety fence. In addition, the operator of the teaching operation must display the sign that the operation is being performed so that no other person closes the safety fence.
  - View the manipulator from the front whenever possible.
  - Always follow the predetermined operating procedure.
  - Always keep in mind emergency response measures against the manipulator’s unexpected movement toward a person.
  - Ensure a safe place to retreat in case of emergency.

Failure to observe this instruction may cause improper or unintended movement of the manipulator, which may result in personal injury.

- Confirm that no person is present in the manipulator's operating range and that the operator is in a safe location before:
  - Turning ON the YRC1000micro power
  - Moving the manipulator by using the programming pendant
  - Running the system in the check mode
  - Performing automatic operations

Personal injury may result if a person enters the manipulator's operating range during operation. Immediately press an emergency stop button whenever there is a problem. The emergency stop button is located on the right of the programming pendant.

- Read and understand the Explanation of the Warning Labels before operating the manipulator.

DANGER

- In the case of not using the programming pendant, be sure to supply the emergency stop button on the equipment. Then before operating the manipulator, check to be sure that the servo power is turned OFF by pressing the emergency stop button.
  Connect the external emergency stop button to the 4-14 pin and 5-15 pin of the Safety connector (Safety).
- Upon shipment of the YRC1000micro, this signal is connected by a jumper cable in the dummy connector. To use the signal, make sure to supply a new connector, and then input it.

If the signal is input with the jumper cable connected, it does not function, which may result in personal injury or equipment damage.

WARNING

- Perform the following inspection procedures prior to conducting manipulator teaching. If there is any problem, immediately take necessary steps to solve it, such as maintenance and repair.
  - Check for a problem in manipulator movement.
  - Check for damage to insulation and sheathing of external wires.
- Return the programming pendant to a safe place after use.

If the programming pendant is left unattended on the manipulator, on a fixture, or on the floor, etc., the Enable Switch may be activated due to surface irregularities of where it is left, and the servo power may be turned ON. In addition, in case the operation of the manipulator starts, the manipulator or the tool may hit the programming pendant left unattended, which may result in personal injury and/or equipment damage.

Definition of Terms Used Often in This Manual

The MOTOMAN is the YASKAWA industrial robot product.

The MOTOMAN usually consists of the manipulator, the YRC1000micro controller, manipulator cables, the YRC1000micro programming pendant (optional), and the YRC1000micro programming pendant dummy connector (optional).

In this manual, the equipment is designated as follows:

Equipment	Manual Designation
YRC1000micro controller	YRC1000micro
YRC1000micro programming pendant	Programming pendant (optional)
Cable between the manipulator and the controller	Manipulator cable
YRC1000micro programming pendant dummy connector	Programming pendant dummy connector (optional)

Descriptions of the programming pendant keys, buttons, and displays are shown as follows:

Equipment		Manual Designation
Programming Pendant	Character Keys /Symbol Keys	The keys which have characters or symbols printed on them are denoted with [ ]. ex. [ENTER]
	Axis Keys /Number Keys	[Axis Key] and [Numeric Key] are generic names for the keys for axis operation and number input.
	Keys pressed simultaneously	When two keys are to be pressed simultaneously, the keys are shown with a “+” sign between them, ex. [SHIFT]+[COORD]
	Mode Key	Three kinds of modes that can be selected by the mode key are denoted as follows: REMOTE, PLAY, or TEACH
	Button	Three buttons on the upper side of the programming pendant are denoted as follows: HOLD button START button EMERGENCY STOP button
	Displays	The menu displayed in the programming pendant is denoted with { }. e.g. {JOB}
PC Keyboard		The name of the key is denoted. e.g. Ctrl key on the keyboard

Description of the Operation Procedure

In the explanation of the operation procedure, the expression "Select • • • " means that the cursor is moved to the object item and [SELECT] is pressed, or that the item is directly selected by touching the screen.

Registered Trademark

In this manual, names of companies, corporations, or products are trademarks, registered trademarks, or brand names for each company or corporation. The indications of (R) and TM are omitted.

Contents

1 What is the Interrupt Job Function? 1-1

2 Setting of the Interrupt Job Function 2-1

2.1 Interruption Table Display 2-1

2.2 Setting of Interruption Table 2-3

2.2.1 Setting of Signals 2-3

2.2.2 Setting of Job Names 2-4

2.3 Setting of Interruption Levels 2-5

3 Registration of Instructions 3-1

3.1 EI (Enable Interruption) Instruction 3-1

3.2 DI (Disable Interruption) Instruction 3-3

4 Execution of an Interrupt Job 4-1

4.1 Interruption Signal Detection 4-1

4.2 Timing for Interrupt Job Execution 4-1

4.3 Deceleration Before Interrupt Job Execution 4-1

4.4 Interruption Signal Entered During Another Interrupt Job 4-1

4.5 Output Signal of “Interrupt Job in Execution” 4-2

4.6 Automatic Interruption Disabled Status 4-2

4.7 Job Call Stack 4-2

4.8 If an interrupt job cannot be executed 4-2

5 Application Examples 5-1

5.1 Interruption During Timer Instruction 5-1

5.2 Interruption During Move Instruction 5-1

5.3 Interruption During Move Instruction with NWAIT 5-2

5.4 Interruption During Circular Interpolation Move Instruction (MOVC) 5-3

6 System with Independent Control 6-1

7 Instruction List 7-1

1 What is the Interrupt Job Function?

The interrupt job function is a kind of call job. When a signal to interrupt the job is sent from a peripheral device or another system, this function momentarily suspends a job in progress, and executes the job corresponding to the signal.

This function is useful when an error occurs in a peripheral device or in another system, or when the manipulator should be withdrawn in an emergency.

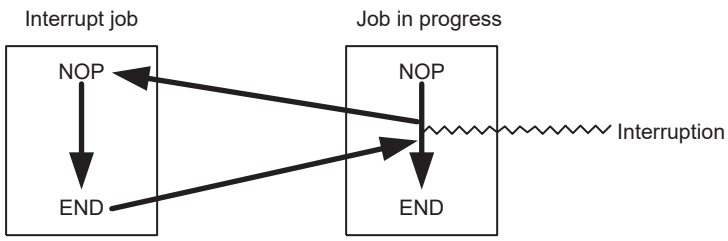

An interruption table defines the relation among the interruption levels (priority of an interruption signal), the interruption signals, and the interrupting jobs.

Sending a user input signal specified in the table calls, a job corresponding to that signal. When interrupt job is completed, the suspended job is restarted from the instruction line where the cursor was at the time of interruption.

> **NOTE** If an interruption signal is received while the manipulator is in the “step” cycle, the manipulator stops at once, and then the next starting operation starts the interrupt job.

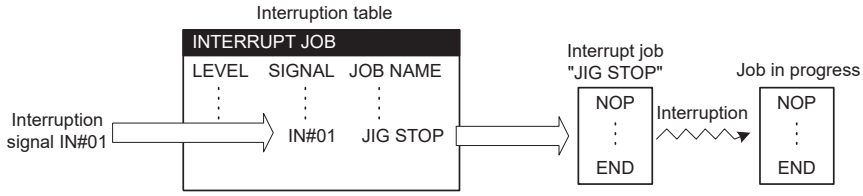

The smaller the interruption level number becomes, the higher the priority of the processing becomes.

Since the YRC1000micro determines which interrupt job is to be executed according to this interruption table, make sure the settings for this table are correct. The system engineer sets up this interruption table.

1 What is the Interrupt Job Function?

NOTE

An interrupt job can be executed when the start lamp is ON and between the execution of the EI (enable interruption) instruction and the DI (disable interruption) instruction.

A different interruption level can be specified for both EI and DI.

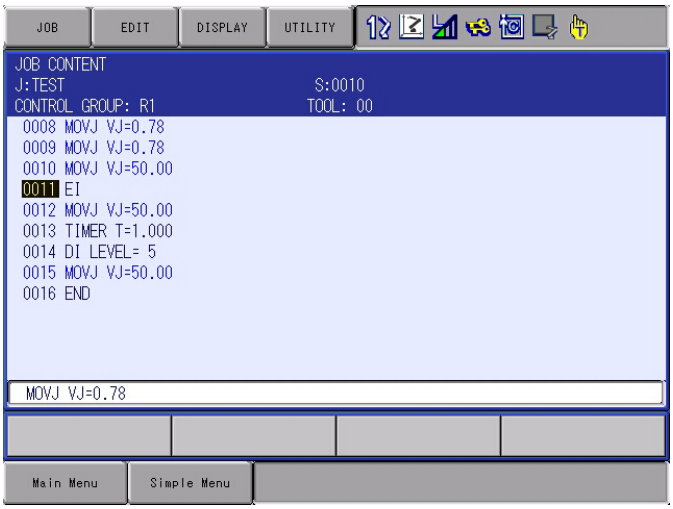

2 Setting of the Interrupt Job Function

2.1 Interruption Table Display

1. Select {JOB} under the main menu.
2. Select {INTERRUPT JOB} in the sub menu.

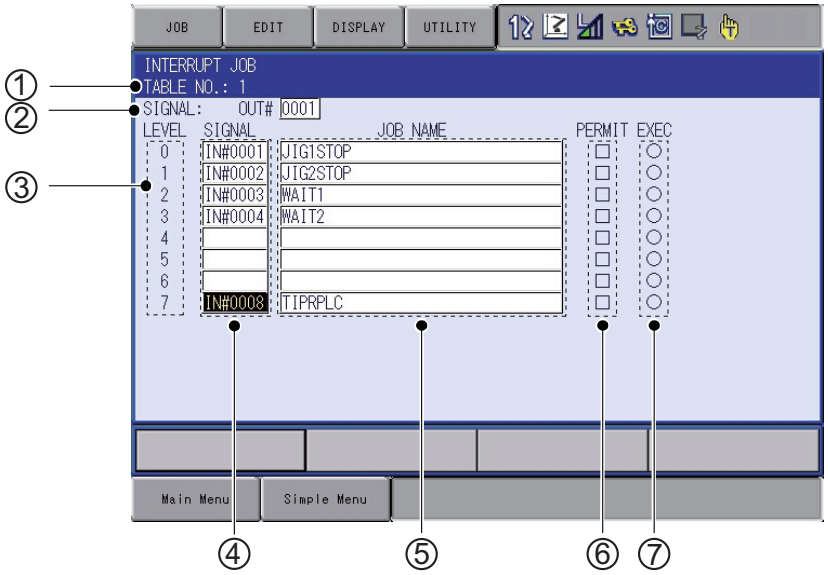

①TABLE NO. (Initial value: 1)

②OUTPUT SIGNAL (Initial value: no setting)
A user output signal that is turned ON during the execution of an interrupt job.

③LEVEL
The interruption level indicates the priority of the interruption signal. The smaller the interruption level number becomes, the higher the priority of the processing becomes. Eight levels from 0 to 7 can be set.

④SIGNAL (Initial value: no setting)
A user input signal serves as an interruption signal.

⑤JOB NAME (Initial value: no setting)
A job name corresponding to an interruption signal

⑥PERMIT
Interruption enabled or disabled status (for diagnosis)
■(Enabled): Interruption enabled by the execution of the EI instruction
□(Disabled): Interruption disabled

⑦EXEC

●(ON): Interrupting job in progress
○(OFF): Interrupting job not in progress

“Exec” turns ON when an interruption signal is received and the interrupt job is called, and turns OFF when the job is completed.

“Exec” turns OFF in the following cases:

- An interrupt job is completed and the suspended job is restarted.
- Another job is called.
- CLEAR STACK instruction is executed.

NOTE

{INTERRUPT JOB} appears when the security mode is the edit mode or management mode.

2.2 Setting of Interruption Table

In a system where an independent control is used simultaneously with the interrupt job function, an interrupt job can be set and executed for each task.

When using four tasks (6 tasks maximum) for the independent control:

Pressing the [PAGE] changes the table No. in this order: “1” → “2” → “3” → “4” → “1”.

Pressing [SHIFT] + [PAGE] changes the table No. in the reverse order: “4” → “3” → “2” → “1” → “4”.

2.2.1 Setting of Signals

1. Move the cursor to the item to be selected, and press [SELECT].

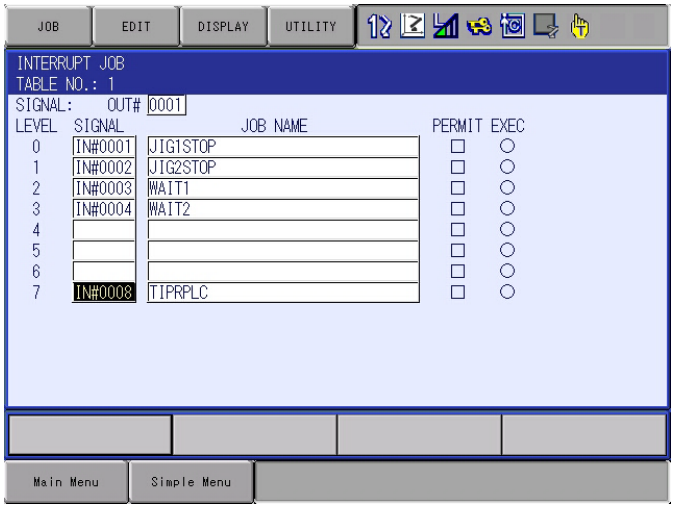

2. Enter a numerical value using the Numeric keys.

NOTE

Entering “0” in SIGNAL clears the set signal No. and job name.

2.2.2 Setting of Job Names

1. Move the cursor to the item to be selected, and press [SELECT].

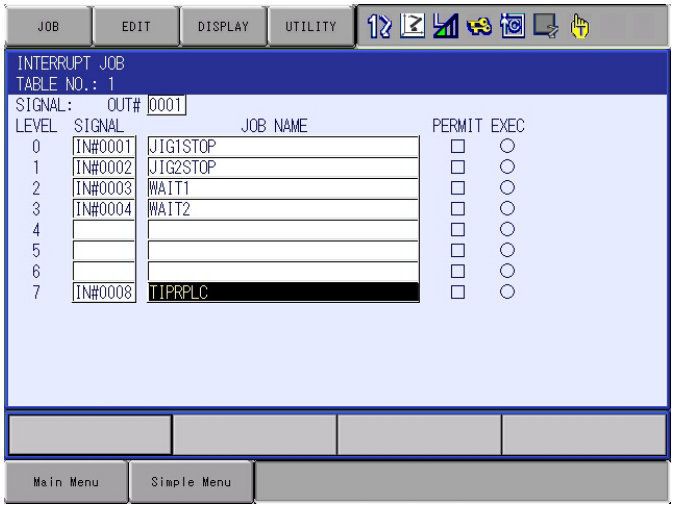

2. Select a job in the JOB LIST window.
3. Press [ENTER].

2.3 Setting of Interruption Levels

To specify the levels where interruptions can be enabled or disabled by the EI and DI instructions respectively, set the bits corresponding to the levels to “1.”

	d7	d6	d5	d4	d3	d2	d1	d0
	LEVEL7	LEVEL6	LEVEL5	LEVEL4	LEVEL3	LEVEL2	LEVEL1	LEVEL0
The set values for the EI/DI instructions	128	64	32	16	8	4	2	1

For example, the set value of level 0 is “1” and the set value of level 2 is “4,” with a total set value of “5”. Therefore, to permit levels 0 and 2, set the EI instruction to “5.”

EI
LEVEL=5

d7	d6	d5	d4	d3	d2	d1	d0
0	0	0	0	0	1	0	1

4 + 1 → 5

The status of other interruption levels remains unchanged.

NOTE

- If no interruption level is specified, all levels from 0 to 7 enable or disable interruption.
- If the interruption level is set to “0,” it is treated like an NOP instruction where no operation is executed and proceeds to the next instruction.

3 Registration of Instructions

3.1 EI (Enable Interruption) Instruction

Executing an EI instruction activates the specified interruption levels set in the additional item.

To specify the levels where interruptions can be enabled, set the bits corresponding to the levels to “1”. The status of the other interruption levels remains unchanged.

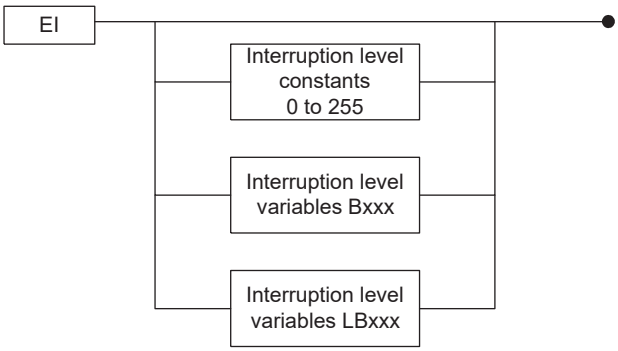

1. Move the cursor to the address area.
2. Press [INFORM LIST].
3. Select {CONTROL}.
4. Move the cursor to “EI.”
   – The EI instruction appears in the input buffer line with the previously registered additional items.

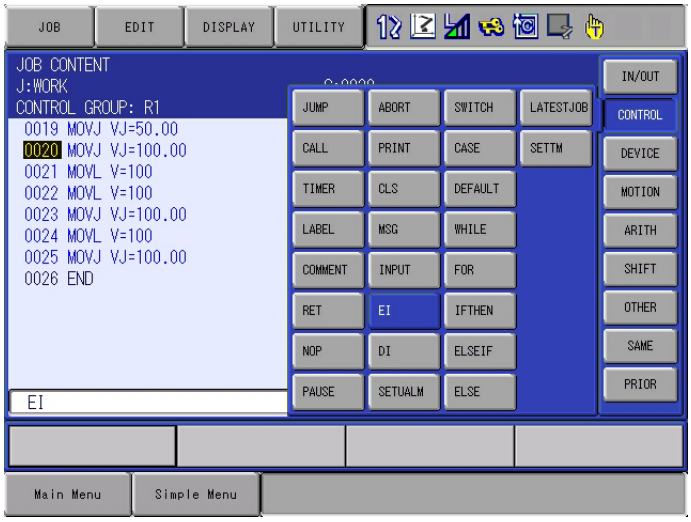

5. Press [SELECT] twice to set an interruption level in the DETAIL EDIT window.
   – Enter the interruption level using the Numeric keys.

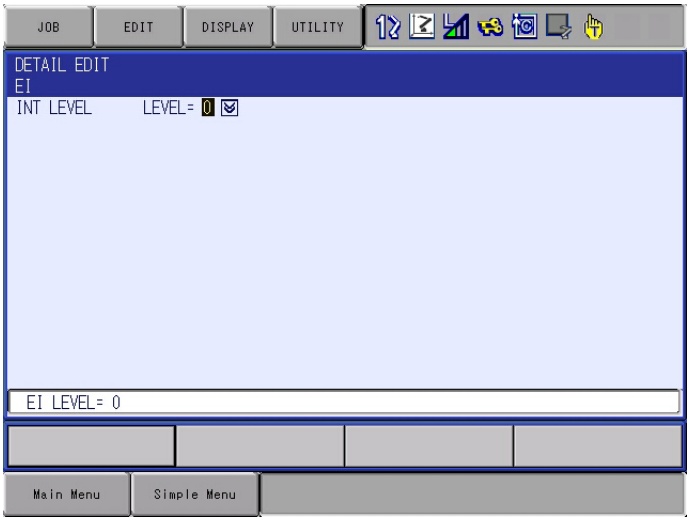

6. Press [ENTER] twice.
   – Pressing [ENTER] once shows the set contents in the input buffer line. Pressing [ENTER] again registers the set contents in the job.

3.2 DI (Disable Interruption) Instruction

Executing a DI instruction activates the specified interruption levels set in the additional item.

To specify the levels where interruptions can be disabled, set the bits corresponding to the levels to “1”. The status of the other interruption levels remains unchanged.

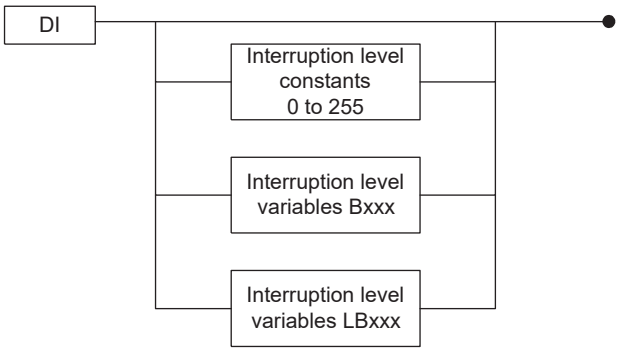

1. Move the cursor to the address area.
2. Press [INFORM LIST].
3. Select {CONTROL}.
4. Move the cursor to “DI”.
   – The DI instruction appears in the input buffer line with the previously registered additional items.

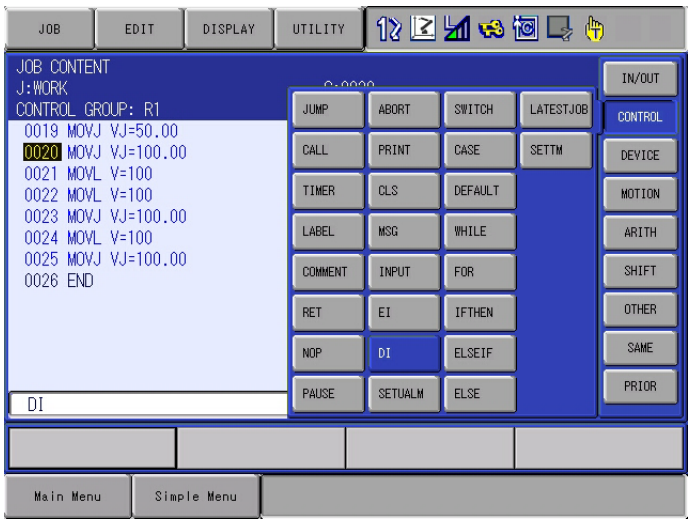

5. Press [SELECT] twice to set an interruption level in the DETAIL EDIT window.
   – Enter the interruption level using the Numeric keys.

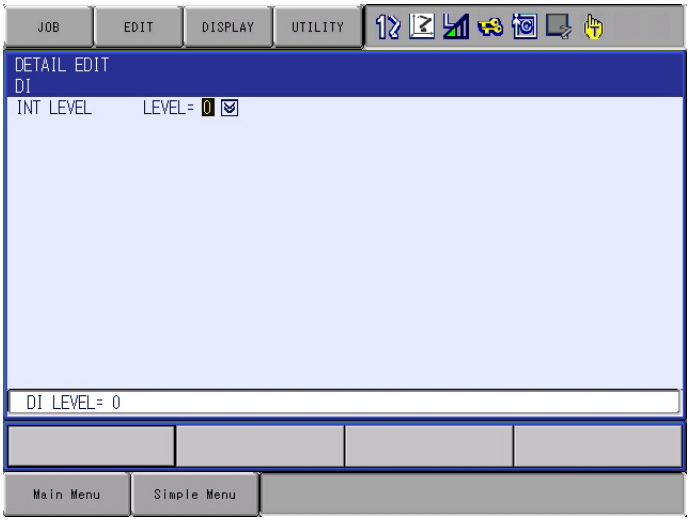

6. Enter the interruption level using the Numeric keys.
   – Pressing [ENTER] once shows the set contents in the input buffer line. Pressing [ENTER] again registers the set contents in the job.

4 Execution of an Interrupt Job

4.1 Interruption Signal Detection

An interruption signal is detected at the rising edge of the signal.

If more than one interruption signal is detected at the same time, the job for the level with higher priority is executed.

4.2 Timing for Interrupt Job Execution

The timing of executing an interrupt job depends on what instruction is being executed when the interruption signal is received, and can be divided into the following two types.

- Suspends the instruction being executed to do an interrupt job
  The following instructions are suspended while executing an interrupt job.

Move Instructions	MOVJ MOVL MOVC IMOV
I/O Instruction	WAIT
Control Instruction	TIMER

- Executes an interrupt job after the completion of the instruction being executed.
  Any instructions other than those listed above are completed before starting an interrupt job.

4.3 Deceleration Before Interrupt Job Execution

If the manipulator is moving at a high speed and the interrupt job is executed immediately after the interruption signal is received, an excessive shock to the manipulator may result.

To avoid this risk, the manipulator automatically decelerates upon receipt of the interruption signal, and then the interrupt job is executed.

4.4 Interruption Signal Entered During Another Interrupt Job

All interruptions are automatically disabled during the execution of an interrupt job. Therefore, if another interruption signal with a higher priority is received, its corresponding job is not executed.

The new signal is ignored. When an interrupt job is completed, even if any interruption signal is ON, the corresponding interrupt job is not executed until the rising edge of the interruption signal is detected.

4.5 Output Signal of “Interrupt Job in Execution”

During execution of an interrupt job, the output signal turns ON to indicate that the interrupt job is being executed. This output signal turns ON when an interruption signal is received and the interrupt job is called, and turns OFF when the interrupt job completes.

The output signal “Interrupt Job in Execution” turns OFF in the following cases:

- The execution of an interrupt job completes and the suspended job is restarted.
- Another job is called.
- The CLEAR STACK instruction is executed.

4.6 Automatic Interruption Disabled Status

Only execution of the EI instruction enables interruptions. Even after the main power supply turns OFF, the interruption enabled/disabled status is kept.

However, when a job is called, all interruption levels are automatically disabled for security.

4.7 Job Call Stack

Job calls made by interruptions are processed like other job calls. The same job call stack is used for both kinds of job calls.

Therefore, adding an interrupt job to a job call stack filled to level 8 causes the stack to overflow.

4.8 If an interrupt job cannot be executed

An interrupt job cannot be executed in any of the following cases:

- During 1 step-back operation caused by the dedicated input #40090-#40091 " 1 step-back operation command”

If an interrupt job is attempted, "AL4525: Specified job not executable" is displayed.

5 Application Examples

5.1 Interruption During Timer Instruction

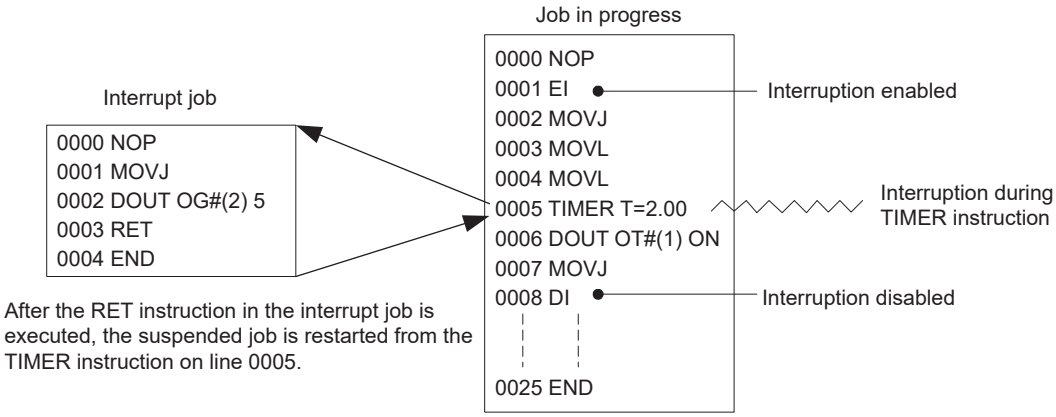

5.2 Interruption During Move Instruction

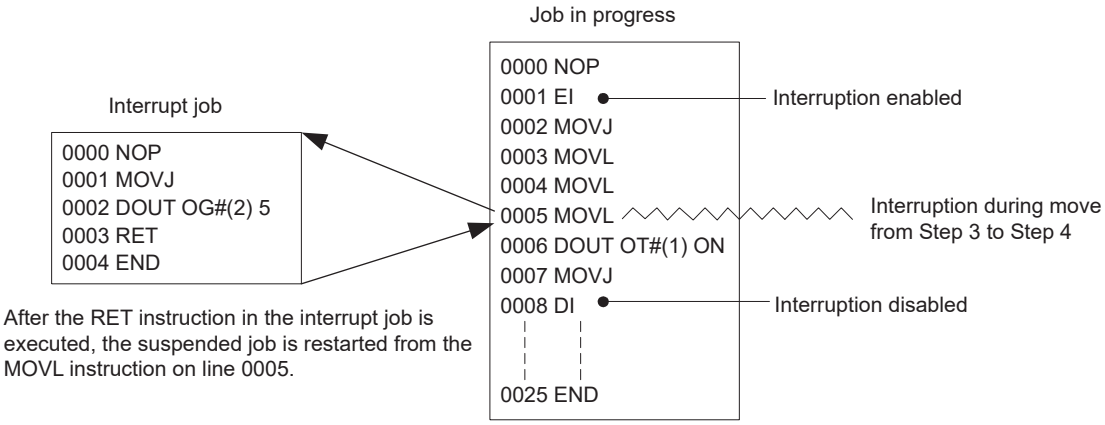

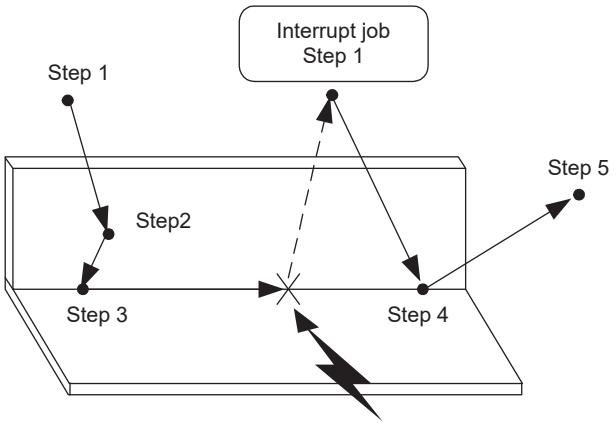

A job interruption (with the cursor on line 0005)

5.3 Interruption During Move Instruction with NWAIT

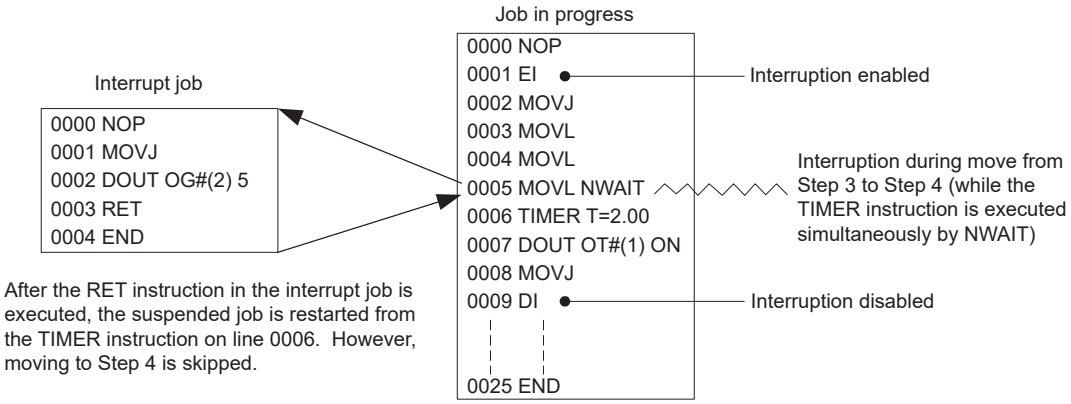

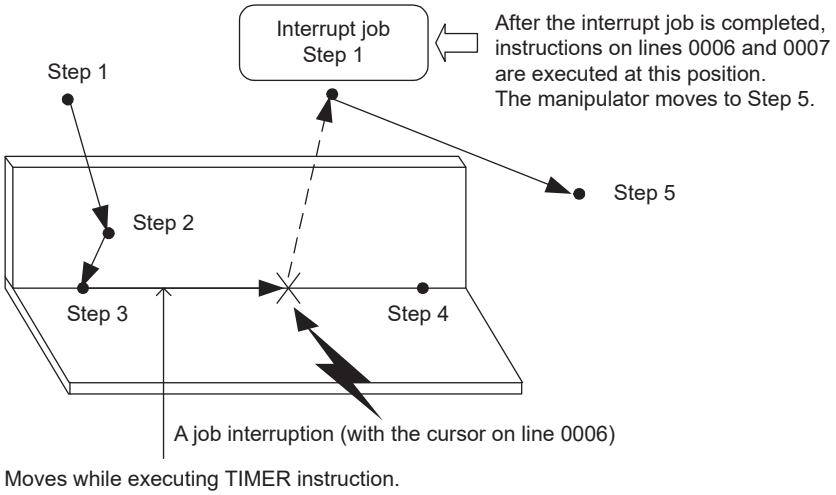

5.4 Interruption During Circular Interpolation Move Instruction (MOVC)

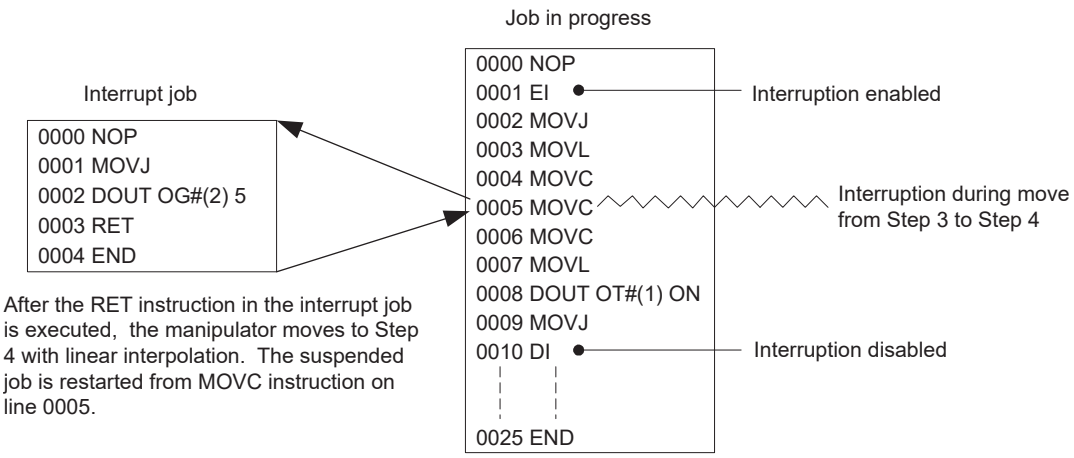

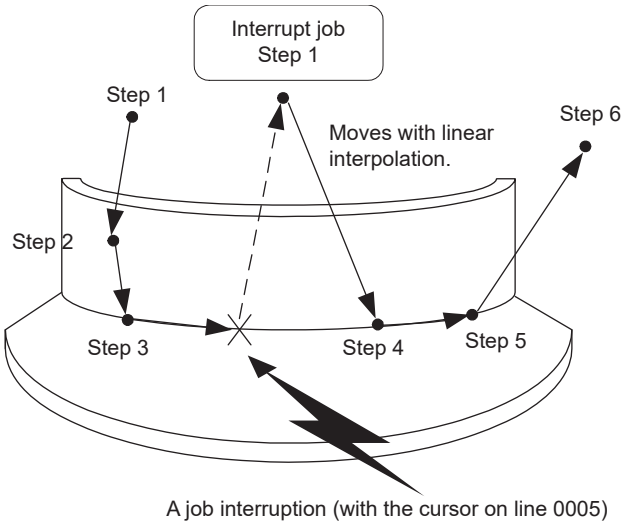

6 System with Independent Control

In a system where an independent control is used simultaneously with the interrupt job function, an interrupt job can be set and executed for each task.

When using four tasks (6 tasks maximum) for the independent control, the table No. indicates the type of task being displayed as follows:

Master task · · · · Table No. 1

Subtask 1 · · · · Table No. 2

Subtask 2 · · · · Table No. 3

Subtask 3 · · · · Table No. 4

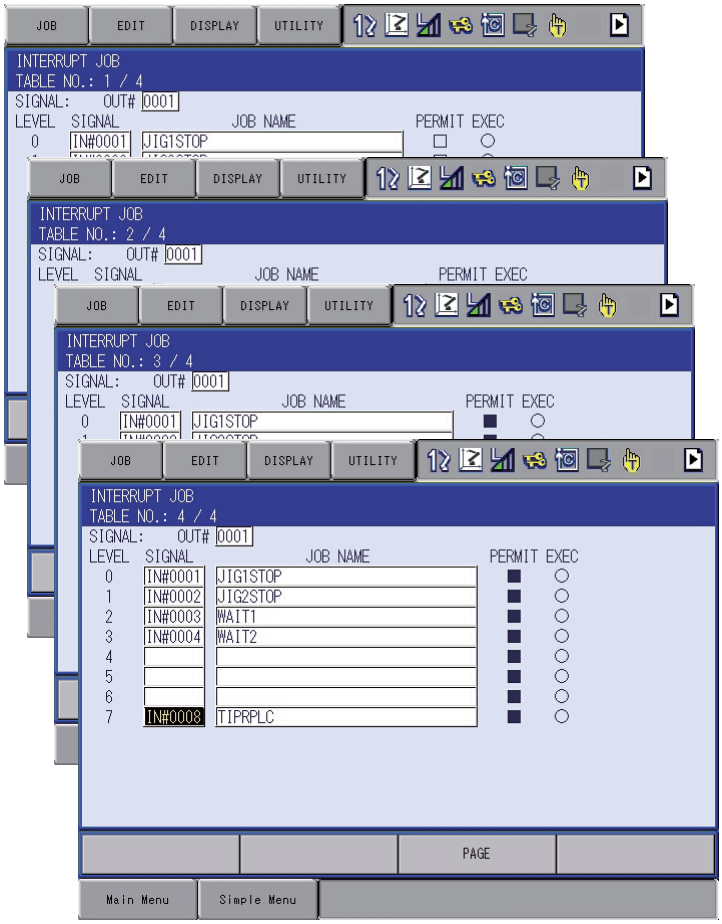

NOTE

- EI and DI instructions are valid only in each individual task. For example, an EI instruction in subtask 1 does not affect any interruption tables in the master task or in subtask 2.

- The following instructions are used for independent control.

PSTART

PWAIT

TSYNC

During execution of an independent control instruction above, the interrupt job function can not be used. Program a DI and an EI instruction before and after the independent control instruction to disable interruptions.

<Job Example>

When a PSEND instruction is used

```
NOP
. . . .
DI
PSTART JOB:R1 SUB1
EI
. . . .
END
```

7 Instruction List

< > indicates numerical or alphabetical data. If multiple items are shown in one section, select one of the items.

EI	Function	Enables a specified interruption level.	
	Additional Items	<Interruption level> B <Variable No.> LB <Variable No.>	0 to 255 for constants. When omitted, all levels are enabled.
	Example	EI LEVEL=1 EI LEVEL=B001 EI	
DI	Function	Disables a specified interruption level.	
	Additional Items	<Interruption level> B <Variable No.> LB <Variable No.>	0 to 255 for constants When omitted, all levels are disabled.
	Example	DI LEVEL=5 DI LEVEL=B001 DI	

YRC1000micro OPTIONS
INSTRUCTIONS

FOR INTERRUPT JOB FUNCTION

For inquiries or after-sales service on this product, contact your local YASKAWA representative as shown below.

YASKAWA ELECTRIC CORPORATION
2-1 Kurosakishiroishi, Yahatanishi-ku, Kitakyushu, 806-0004, Japan
Phone: +81-93-645-7703 Fax: +81-93-645-7802
www.yaskawa.co.jp

YASKAWA AMERICA, INC. (MOTOMAN ROBOTICS DIVISION)
100 Automation Way, Miamisburg, OH 45342, U.S.A.
Phone: +1-937-847-6200 Fax: +1-937-847-6277
www.motoman.com

YASKAWA EUROPE GmbH (ROBOTICS DIVISION)
Yaskawastrasse 1, 85391, Allershausen, Germany
Phone: +49-8166-90-0 Fax: +49-8166-90-103
www.yaskawa.eu.com

YASKAWA NORDIC AB
Verkstadsgatan 2, Box 504, SE-385 25 Torsas, Sweden
Phone: +46-480-417-800 Fax: +46-486-414-10
www.yaskawa.se

YASKAWA ELECTRIC (CHINA) CO., LTD.
22F, One Corporate Avenue, No.222 Hubin Road, Huangpu District, Shanghai 200021, China
Phone: +86-21-5385-2200 Fax: +86-21-5385-3299
www.yaskawa.com.cn

YASKAWA SHOUGANG ROBOT CO., LTD.
No.2 Building, No.6 Rongchang East Street, Beijing E&T Development Area, Beijing 100176, China
Phone: +86-10-6788-2858 Fax: +86-10-6788-2878
www.ysr-motoman.cn

YASKAWA ELECTRIC KOREA CORPORATION
6F, 112, LS-ro, Dongan-gu, Anyang-si, Gyeonggi-do, 14118, Korea
Phone: +82-31-8015-4224 Fax: +82-31-8015-5034
www.yaskawa.co.kr

YASKAWA ELECTRIC TAIWAN CORPORATION
12F, No.207, Sec. 3, Beishin Rd., Shindian District, New Taipei City 23143, Taiwan
Phone: +886-2-8913-1333 Fax: +886-2-8913-1513
www.yaskawa.com.tw

YASKAWA ASIA PACIFIC PTE. LTD.
30A Kallang Place, #06-01, 339213, Singapore
Phone: +65-6282-3003 Fax: +65-6289-3003
www.yaskawa.com.sg

YASKAWA ELECTRIC (THAILAND) CO., LTD.
59, 1st-5th Floor, Flourish Building, Soi Ratchadapisek 18, Ratchadapisek Road, Huaykwang,
Bangkok 10310, Thailand
Phone: +66-2-017-0099 Fax: +66-2-017-0199
www.yaskawa.co.th

PT. YASKAWA ELECTRIC INDONESIA
Secure Building-Gedung B Lantai Dasar & Lantai 1 Jl. Raya Protokol Halim Perdanakusuma,
Jakarta 13610, Indonesia
Phone: +62-21-2982-6470 Fax: +62-21-2982-6471
www.yaskawa.co.id

YASKAWA INDIA PRIVATE LIMITED (ROBOTICS DIVISION)
No.136, Sector-8, Industrial Estate, IMT Manesar, Gurugram, Haryana 122050, India
Phone: +91-124-475-8500
www.yaskawaindia.in

Specifications are subject to change without notice
for ongoing product modifications and improvements.

YASKAWA

YASKAWA ELECTRIC CORPORATION

© Printed in Japan October 2024 17-07

MANUAL NO.
HW1484494 ①